2025 International Conference on
Unmanned Aircraft Systems (ICUAS)
May 14-17, 2025. North Carolina, USA

Analysis and validation of CFD model in propeller-wing configurations

Kshitij Ghoshal[1] and Meyer Nahon[1]

2025 International Conference on Unmanned Aircraft Systems (ICUAS) | 979-8-3315-1328-3/25/$31.00 ©2025 IEEE | DOI: 10.1109/ICUAS65942.2025.11007935

***Abstract*—Recent advances in Unmanned Aerial Vehicle (UAV) designs have increasingly incorporated Distributed Electric Propulsion (DEP) systems, characterized by multiple propellers attached on the leading edge of the wing. The increased interest in DEP necessitates understanding the aerodynamic effect of such multi-propeller configurations on aircraft performance. The development of a propeller model using Computational Fluid Dynamics (CFD) ensures flexibility in simulating different situations and analyzing the flow around the wing. In the present study, a CFD model developed to simulate the propeller slipstream was validated in the presence of a wing in different configurations. Simulations were assessed by varying freestream velocity, propeller advance ratio, and wing geometry. The effects produced by a single propeller were examined first before extending the analysis to multi-propeller configurations. The aerodynamic coefficients, specifically lift and drag, were compared to existing experimental results, demonstrating good agreement.**

I. Introduction

There are a number of advantages to using Unmanned Aerial Vehicles for performing a variety of tasks, such as disaster management, agriculture, and construction. The absence of a pilot allows the aircraft to perform difficult maneuvers, access remote locations, and have a comparatively small body and weight. Electrical energy, which is one of the fastest growing sectors, is widely used in UAVs because of its flexibility and safety. Electrical motors are also versatile and occupy less space, allowing for different types of aircraft design, such as Distributed Electric Propulsion (DEP). In DEP, multiple small electric motors are placed on the leading edge of the wing, driving multiple propellers. Moreover, UAVs with a focus on agility can use propeller airflow to perform extreme maneuvers, such as hovering.

The wing's aerodynamic performance can be strongly affected by the propeller slipstream, and this provides the impetus to fully understand the effect of the slipstream by modeling it either theoretically, empirically, or computationally. Momentum theory is one such method where the propeller is assumed to be a thin uniform disk, and the propeller slipstream is contained in a contracting stream tube. Blade element momentum theory (BEMT) is another method that calculates the differential thrust and torque of a blade element using the induced velocity at the propeller disk. These two theories form the foundation for most other theories. The variations come down to finding an expression for the induced velocity [1]. Goldstein's classical vortex theory [2] is one approach to relate the induced velocity to the circulation around a blade element. However, such methods require substantial computational power and cannot be applied to any circulation distribution. Hough [3] proposed a method to solve this problem by fixing the circulation distribution to approximately match the Goldstein optimum distribution.

The propeller model developed by Herfray [4] was successful in simulating the slipstream for isolated propellers using OpenFOAM, a Computational Fluid Dynamics (CFD) software. Other models use the detailed propeller geometry to fully simulate the rotational aspect of the flow for higher accuracy. However, this requires the software to simulate transient flow, making it computationally expensive. The model [4] was developed to provide flow information that could be used in an aircraft dynamics model; and not to study the flow in detail, lessening the accuracy requirements. Thus, all simulations were conducted using a steady solver called SimpleFOAM, which solves the steady Reynolds-Averaged Navier-Stokes (RANS) equations iteratively using numerical schemes. In Herfray [4], the model was validated for a few isolated propellers by comparing results with experimental data present in [5] and [6]. Existing research on propeller-wing layouts using CFD primarily utilizes software like Ansys, SU2 or U-ZEN [7] for their ease of use. Wang [8] provides a detailed computational study on propeller-aided double-wing designs using RANS models. Meng [9] showcases how the propeller effect increases while using channel wings. There also exist experimental results in [10], [11], and [12], which capture the effect of single or dual propeller slipstreams on an aircraft wing. Those works measured the wing's lift and drag coefficients for different conditions by varying the wing aspect ratio, propeller location, and propeller advance ratio. Lee [13] experimented with a multi-propeller setup and found lift and drag coefficients while varying the advance ratio and Reynolds number.

In this study, we focus on understanding the effect of wing-mounted propellers on a wing's aerodynamics. Herfray's propeller model [4] is modified such that it may be applied to various propeller-wing configurations to analyze aerodynamic coefficients. The devised methodology of this integration results in a robust model which utilizes OpenFOAM to simulate airflow around the wing offering several advantages, including

Financial support for this research from the Natural Sciences and Engineering Research Council of Canada is gratefully acknowledged.

[1] Kshitij Ghoshal and Meyer Nahon are with the Department of Mechanical Engineering, McGill University, Montreal, QC, Canada

Authorized licensed use limited to: Indian Institute of Technology. Downloaded on March 02,2026 at 13:35:13 UTC from IEEE Xplore. Restrictions apply.

flexibility and high fidelity. OpenFOAM, being an open-source tool, allows for easy modifications of the simulation setups to accommodate different conditions and layouts, making it suitable for a wide range of flow scenarios. Access to the source code also allows us to have a deeper understanding of the underlying physics and make small changes as needed. Another positive effect involves the lower computation time due to a fairly simple model structure. Our method is also adaptive, experiencing comparatively fewer challenges regarding convergence, stability, and accuracy.

In the following sections, the simulation methodology is validated thoroughly for multiple setups. Section II gives a brief summary of the propeller model. In sections III and IV, single and dual propeller setups in tractor configuration are simulated and analyzed in the presence of rectangular wings. In section V, multi-propeller configurations are later examined to ascertain how the individual slipstreams interact and their impact on the wing's aerodynamics. In all simulations, the coefficients are plotted for various angles of attack and validated against available experimental results, demonstrating good agreement.

II. Non-uniform propeller model

The propeller model developed by Herfray [4] was based on the work by Svenning [14]. The model resolves the flow around a propeller with the intent of saving computational cost. An actuator disk region is defined rather than using the detailed propeller geometry. The model predicts the momentum transferred from the propeller to the flow inside this region. The momentum transfer is predicted by introducing body forces in the disk volume to achieve the desired thrust and torque.

In the simulations performed in this study, the propeller faces the $-x$ direction, having a diameter of D and an angular velocity $\Omega\hat{x}$. The surrounding flow also has a positive freestream velocity of $V\hat{x}$. The propeller induces two velocities in the tangential direction u_θ and axial direction u_x (neglecting the radial component). The resultant relative velocity to the blade element is:

$$U_0 = (V + u_x)\hat{x} + (r\Omega - u_\theta)\hat{\theta} \tag{1}$$

At each radial distance r on the blade, there exists a circulation $\Gamma(r)\hat{r}$. Using the Kutta-Joukowski theorem, the differential torque Q and thrust T can be found. After integration over the propeller radius, the total thrust and torque were used to find the averaged body forces:

$$f_x = \frac{1}{\rho}\frac{\mathrm{d}T}{\mathrm{d}V} = \frac{1}{2\pi tr}B(r\Omega - u_\theta)\Gamma \tag{2}$$

$$f_\theta = \frac{1}{\rho r}\frac{\mathrm{d}Q}{\mathrm{d}V} = \frac{1}{2\pi tr}B(V + u_x)\Gamma \tag{3}$$

where B is the number of blades in the propeller, t is the thickness of the propeller disk, and the quantities were differentiated with respect to volume V. To solve the above equations, some assumptions need to be made to find the unknown quantities: u_x, u_θ, Γ, which are a function of radial distance r.

The quantity $\Gamma(r)$ is the radial circulation distribution, which was assumed to resemble the Goldstein distribution [2] for which a closed-form solution does not exist. However, Hough [3] proposed a distribution similar to the Goldstein optimum.

$$\Gamma(r) = A(V + u_x)\frac{r}{R}\sqrt{1 - \frac{r}{R}} \tag{4}$$

where A is a constant of proportionality, R is the propeller radius. $\frac{r}{R}$ is the normalised radius which can also be written as r'. The advance ratio J is defined as $(J = \frac{V_\infty}{nD})$ where n is the propeller rotational speed in rotations per second and D is the propeller diameter.

In equation 2, $\frac{u_\theta}{r\Omega}$ was assumed to be constant constant radially. The next assumption involved the axial velocity being constant throughout the propeller disk. These assumptions were used by Svenning [14] to model the propeller as an actuator disk in OpenFOAM. Applying these to the force equations gives:

$$f_x = A_x r'\sqrt{1 - r'} \tag{5}$$

$$f_\theta = A_\theta \frac{r'\sqrt{1 - r'}}{r} \tag{6}$$

A. Propeller with hub

For the propeller forces to be modelled more realistically, a cylindrical hub with a finite radius $R_h < R$ was introduced. Wald [15] introduced a bijective map between the radial position r and a normalized radial position in the far wake where the effects of the hub are non-existent.

$$\left(\frac{r}{R}\right)^2 = \left(\frac{R_h}{R}\right)^2 + \left(\frac{r_1}{R_1}\right)^2\left[1 - \left(\frac{R_h}{R}\right)^2\right] \tag{7}$$

where r is the position at the propeller plane and r_1 is the radial position of a particle which has passed through the propeller plane at r_0. The radius of the propeller stream-tube in the far-wake region is R_1. The circulation distribution should thus be a function of the normalized far wake radial distance $r_s = \frac{r_1}{R_1}$ instead since the optimal is derived from the far wake. However, since r is the primary variable, we can rewrite it as below.

$$\Gamma \sim r_s\sqrt{1 - r_s} \tag{8}$$

$$r_s = \sqrt{\frac{r^2 - R_h^2}{R^2 - R_h^2}} \tag{9}$$

Hence, the propeller forces in the presence of a hub can be rewritten as:

$$f_x = A_x r_s\sqrt{1 - r_s} \tag{10}$$

$$f_\theta = A_\theta \frac{r_s\sqrt{1 - r_s}}{r} \tag{11}$$

Authorized licensed use limited to: Indian Institute of Technology. Downloaded on March 02,2026 at 13:35:13 UTC from IEEE Xplore. Restrictions apply.

The unknowns left to be found were the constants A_x and A_θ. For this, the thrust produced by the propeller was found by integrating the axial force over the disk volume V.

$$T = \int \rho f_x dV \tag{12}$$

$$= 2\pi t \rho A_x \int_{r=R_h}^{R} r \cdot r_s \sqrt{1 - r_s} dr \tag{13}$$

$$= \pi t \rho (R^2 - R_h^2) A_x \int_0^1 2x^2 \sqrt{1 - x} dx \tag{14}$$

In equation (14), a coordinate transformation was done on the definite integral by replacing $r_s = x$, which results in $rdr = x(R^2 - R_h^2)$ using equation (9). The integral now is a constant value referred to as the Goldstein factor or the mass transport coefficient denoted by κ. In this formulation, the coefficient $\kappa = \frac{32}{105}$. Similarly, a calculation can be done by integrating rf_θ to relate it to the torque, Q.

Using this information, we can find the expressions for A_x and A_θ and rewrite them using dimensionless coefficients:

$$A_x = \frac{4C_T \Omega^2 R^4}{\pi^3 t (R^2 - R_h^2)\kappa} \tag{15}$$

$$A_\theta = \frac{4C_P \Omega^2 R^5}{\pi^4 t (R^2 - R_h^2)\kappa} \tag{16}$$

Herfray [4] also talks about how the model was implemented in OpenFOAM using a novel class object based on the findings of Svenning [14].

III. Single Wing-Mounted propeller

In this section, we investigate the lift and drag coefficient change experienced by a rectangular wing in the presence of a propeller in the tractor configuration and compare it to experimental results found in [10]. The single propeller in these configurations is placed at the wing's center, spanwise.

A. Simulation setup

Two different simulations were conducted to verify the effect of varying advance ratios. The simulations were conducted using a rectangular wing with a Wortmann FX $63-137$ airfoil, with a GWS 5×4.3 propeller mounted ahead of the wing ('tractor' configuration). The distance of the propeller to the wing's aerodynamic center was $X = 0.725D$ and $Z = 0$, where D is the propeller diameter and X and Z are shown in Fig. 1. The origin of the coordinate system used was shifted up by $0.17in$ from the wing chordline to account for the wing camber. The rectangular wing had a chord length of $c = 3.5in$ $(8.89cm)$ and a span of $b = 14in$ $(35.56cm)$, corresponding to an aspect ratio of $A = 4$. Fig. 1 also shows the final propeller-wing configuration in OpenFOAM. The propeller had a diameter of $5in$ $(12.7cm)$ and a pitch of $4.3in$ $(10.9cm)$, as described in its nomenclature. It was chosen for the simulations [10] as it is of comparable size to the wing, and the propeller performance data is available [16].

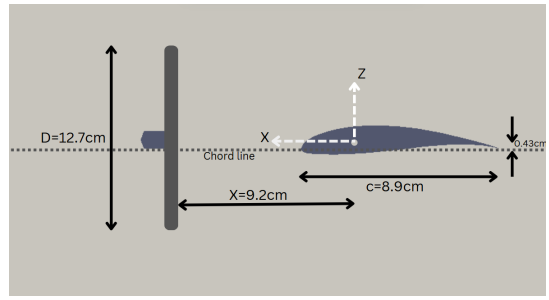

Fig. 1: Propeller-wing layout for tractor configuration

The propeller-wing setup was first run with a freestream velocity of $V_\infty = 34.4ft/s$ $(10.5m/s)$ and a propeller rotational speed of 7000 RPM. The thrust coefficient was $C_T = 0.025$, and the power coefficient was $C_P = 0.035$ [16] for the first case with an advance ratio of $J = 0.7$. A second simulation was run with an advance ratio of $J = 0.2$ with a freestream velocity of $V_\infty = 9.84ft/s$ $(3m/s)$, keeping the same rotational speed. The thrust coefficient for this case was $C_T = 0.13$, and the power coefficient was $C_P = 0.075$ [16]. The second case was chosen arbitrarily to investigate the change when the propeller produces a higher thrust.

CFD settings: In all propeller-wing simulations, the propeller mesh is generated for the full propeller-wing configuration with a much larger computational domain, which is modified depending on each case. The tractor configuration has a domain of $6m \times 1m \times 1.5m$. This is purely because of the wing scale and required mesh refinement level. The mesh is refined further using the $snappyHexMesh$ utility. It includes three cylindrical regions enclosing the body, where the closest region to the body has the highest level of refinement to capture the flow accurately. The turbulence model used in these simulations is the $k - \epsilon$ model; however, the simulation for the clean wing case uses the Langtry-Menter $k - \omega$ SST model to simulate a laminar separation bubble formed on the upper surface of the wing, as discussed later.

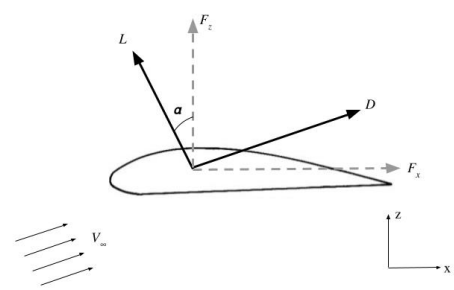

Fig. 2: Forces acting on an airfoil

The lift and drag are required as output for various angles

Authorized licensed use limited to: Indian Institute of Technology. Downloaded on March 02,2026 at 13:35:13 UTC from IEEE Xplore. Restrictions apply.

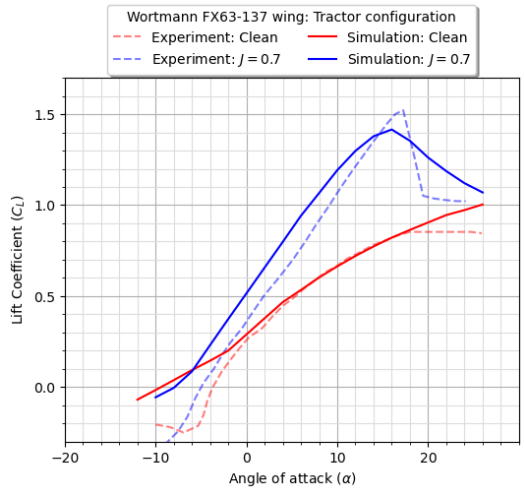

(a) C_L as a function of α

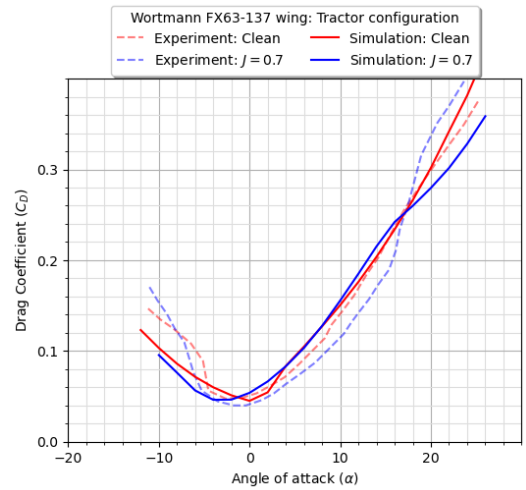

(b) C_D as a function of α

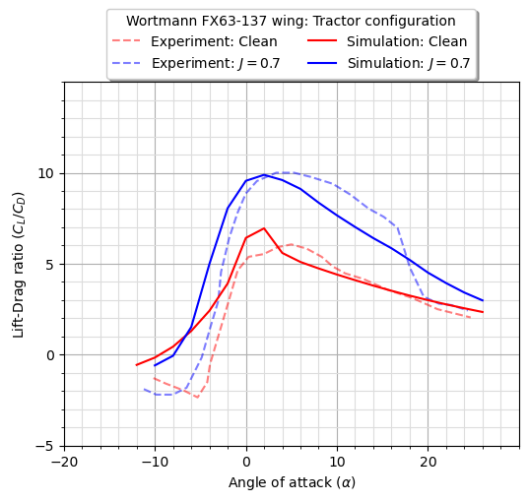

(c) $\frac{C_L}{C_D}$ as a function of α

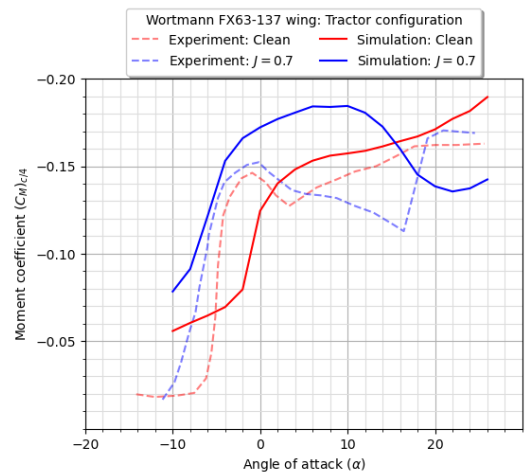

(d) $(C_M)_{c/4}$ as a function of α

Fig. 3: Comparison of aerodynamic coefficients between CFD and experimental results [17] for $J = 0.7$ case

of attack for analysis in all simulations. In order to simulate the required angle of attack, the freestream velocity vector is rotated in the XZ plane instead of rotating the body inside the domain. This reduces computation time as the mesh needs to be generated only once. Fig. 2 shows a visual representation of the angle of attack and the corresponding body forces.

The CFD model outputs three forces in the coordinate directions: F_x, F_y, and F_z. Lift L and drag D can be calculated from these forces by the relation:

$$L = -F_x sin\alpha + F_z cos\alpha \tag{17}$$

$$D = F_x cos\alpha + F_z sin\alpha \tag{18}$$

where α is the angle of attack. The aerodynamic forces are almost always represented using their respective dimensionless coefficients:

$$C_L = \frac{L}{\frac{1}{2}\rho S V_\infty^2} \tag{19}$$

$$C_D = \frac{D}{\frac{1}{2}\rho S V_\infty^2} \tag{20}$$

where C_L is the lift coefficient, C_D is the drag coefficient, ρ is the density, and S is the area of the wing surface. It is to be noted that the forces acting on the wing in Fig. 2 include only the aerodynamic forces produced by the wing itself and exclude the thrust generated by the propeller.

B. Results

The simulations discussed above are run for angles of attack from $\alpha = 0°$ to $\alpha = 26°$, with increments of 2°, to generate lift and drag curves. These angles are selected to compare the aerodynamic coefficients to experimental results found in [10].

Authorized licensed use limited to: Indian Institute of Technology. Downloaded on March 02,2026 at 13:35:13 UTC from IEEE Xplore. Restrictions apply.

The clean wing case was first simulated to compare with the propeller case. As discussed previously, it is to be noted that this case used a turbulence model that was different from the propeller case. This was done to simulate the laminar separation bubble in the clean wing case, which is not possible using the $k-\epsilon$ model. In the absence of the propeller slipstream, a laminar separation bubble is formed on the trailing edge, which moves along the wing towards the leading edge as the angle of attack increases [10]. The propeller-induced flow generates turbulence over this region, which does not allow the formation of the bubble as it induces reattachment over the wing.

Fig. 3a shows the lift curve for the $J = 0.7$ and the clean cases, along with the experimental results from [10]. The lift coefficient for the $J = 0.7$ case shows a clear jump from the clean case due to the presence of the propeller. This is mainly because the laminar separation bubble is not formed, which hinders lift generation for this particular airfoil in the clean case. Notably, at this Reynolds number of around $Re = 60000$, if there was no bubble formation even for the clean case, the propeller would have had a much smaller effect on the lift because of the low thrust factor. However, the results are similar to the experiment in both trend and magnitude. The stall angle is observed to be $\alpha = 16°$ for the experiment and the simulation. Fig. 3b, 3c, and 3d show the drag curve, the lift-to-drag ratio, and moment coefficient plot respectively, along with the experimental results from [10]. For the experimental data, the author mentions that "the relative uncertainties of the lift, drag, and moment coefficients were calculated to be 3.3%, 2.7%, and 4.6%, respectively" [10]. The output for drag and lift-to-drag ratio matches the experimental results, and we see a clear improvement in the lift-to-drag ratio when the propeller is switched on. However, the pitching moment magnitude does not agree well with the experiment.

In order to see the change produced by the propeller without the separation bubble, the $J = 0.2$ case was simulated because it corresponds to a lower Reynolds number of $Re = 17800$. The two simulations for the propeller and the clean case used the $k-\epsilon$ turbulence model. Fig. 4a and 4b show the lift and drag coefficient of the simulations. Although there is no experimental data to compare the simulation results, we notice a large jump in the lift coefficient when the propeller is switched on. The increase in the coefficient is observed to be non-linear, as the slope of the lift curve has also changed. There is also a slight increase in the stall angle compared to the clean case. The drag coefficient also increases non-linearly with increasing angle of attack.

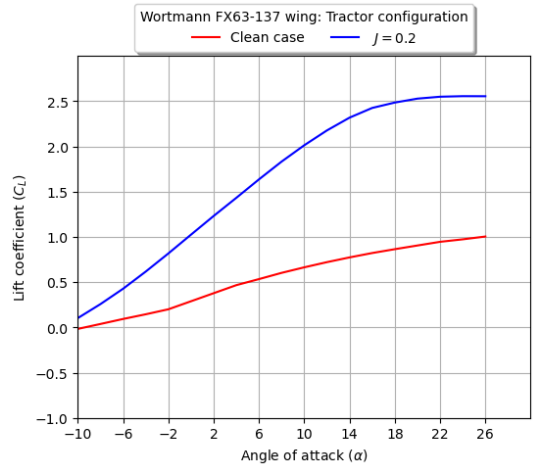

(a) C_L as a function of α

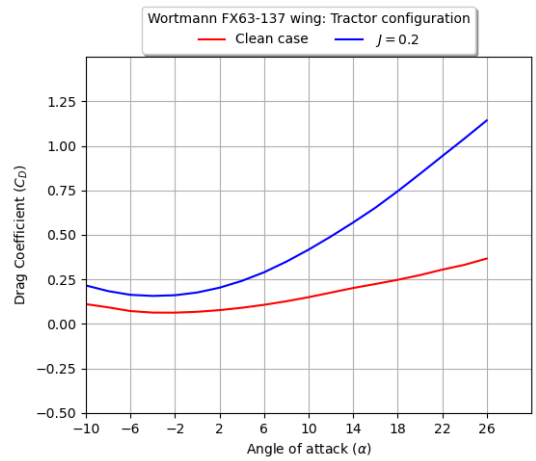

(b) C_D as a function of α

Fig. 4: Comparison of aerodynamic coefficients for $J = 0.2$ case

IV. Dual propellers

The next case considered is that of a rectangular wing with NACA $642-A015$ airfoil section with two propellers to verify their effect on the aerodynamics. The wing had a chord length of $c = 0.24m$ and a span of $b = 1.28m$, resulting in an aspect ratio of $A = 5.33$. Two propellers are attached to the wing using nacelles at a distance of $0.3m$ from the wing root to simulate the configuration used in the experiments of [12]. Fig. 5a shows the dimensions for half of the propeller-wing configuration. The propeller's diameter was $D = 0.236m$, and the nacelle was assumed to be cylindrical for development of the CAD model, as seen in Fig. 5b. The dimensions of the computational domain for the propeller-wing configuration were $13m \times 10m \times 6m$. The configuration is run at a freestream velocity of $V_\infty = 50m/s$ (Re=$800,000$) and an advance ratio of $J = 0.81$. The propeller thrust coefficient was $C_T = 0.13$, and the power coefficient was $C_P = 0.18$ given that propeller power was $P = 3kW$.

A. Results

A clean wing case was also simulated with only the wing-nacelle configuration for comparison. The coefficients are observed at various angles of attack from $\alpha = 0°$ to $\alpha = 10°$. Fig. 6a and 6b show the lift and drag curves of the clean case and the propeller case at $J = 0.81$, along with the experimental results found in [12]. The source for the experimental results does not mention the uncertainties in the aerodynamic coefficients. When the propeller is turned on,

Authorized licensed use limited to: Indian Institute of Technology. Downloaded on March 02,2026 at 13:35:13 UTC from IEEE Xplore. Restrictions apply.

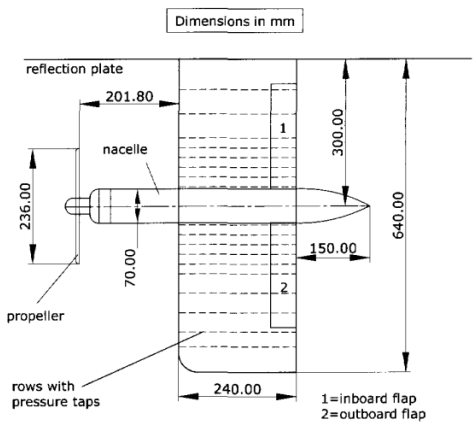

(a) Top view of the model used in the experiment in [12]

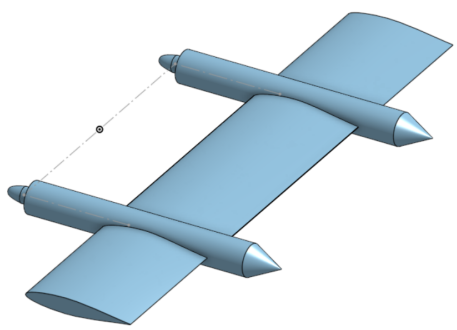

(b) CAD model

Fig. 5: Dimensions and CAD model of the configuration

(a) C_L as a function of α

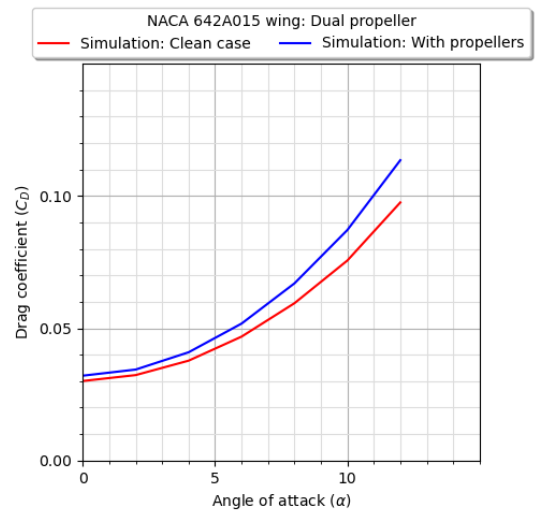

(b) C_D as a function of α

Fig. 6: Comparison of aerodynamic coefficients between CFD and experimental results [12] for dual propeller case at $J = 0.81$

the lift curve slope is observed to increase. The plots are linear as stall is not reached by $\alpha = 10°$, and they intersect at $\alpha = 0°$ because of the symmetric airfoil. The output aligns well with the experimental results. The increase in drag coefficient for both the clean case and the propeller case is seen to be non-linear with increasing angle of attack.

V. Multiple propellers

The previous sections investigated the effect of single or dual-propeller slipstreams on the aerodynamics of a rectangular wing. The developed propeller model was validated, and the changes to lift and drag were verified. This section investigates the multiple-propeller driven aircraft by simulating the DEP setup from [13] and compares the results to further validate the model.

A. Simulation setup

The experimental setup in [13] used a rectangular half wing equipped with four propellers in a wind tunnel. The wing had a NACA 0012 airfoil profile with a semi-span of $\frac{b}{2} = 0.568m$ and a chord of $c = 0.253m$. Fig. 7a shows the whole wind tunnel setup in which the forces were measured using a force balance. It is to be noted that the forces measured in the experiment are the total forces acting on the propeller-wing configuration and, therefore, include the contribution of the thrusters. The propellers in the setup were placed in a tractor configuration on the wing's leading edge. Each propeller had a diameter of $D = 0.14m$ and a blade pitch angle of $\beta = 23.9°$ at 75% of the radius. The propeller profile followed that of the propeller used in [18], shown in Fig. 7b with dimensions in mm. The propeller in [18] had to be scaled down to the desired diameter in [13].

The CFD setup in OpenFOAM simulated the same configuration; however, the entire wing with eight propellers was added instead of the half wing by mirroring the setup in Fig. 7a spanwise. This was done to reduce wall effects on the wing close to the wind tunnel wall. The computational domain had a size of $20m \times 2m \times 6m$ to simulate the same distance to the outer wall as in the experiment. The propeller thrust coefficient

Authorized licensed use limited to: Indian Institute of Technology. Downloaded on March 02,2026 at 13:35:13 UTC from IEEE Xplore. Restrictions apply.

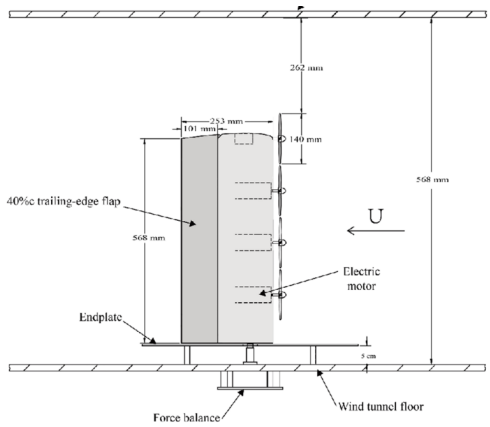

(a) Experimental setup for DEP configuration [13]

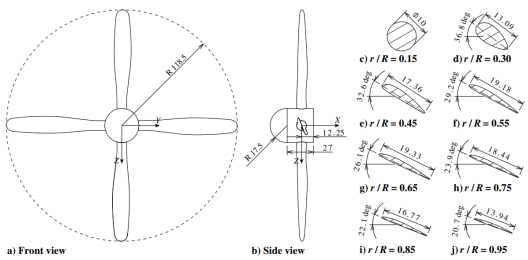

(b) Propeller geometry [18] (dimensions in mm)

Fig. 7: Dimensions for the DEP configuration

to be input in the simulation was found using a separate single-propeller experimental setup. The metal propeller used in [13] was placed in a propeller test stand developed by Tyto Robotics Inc. and was run at varying rotational speeds. The power and thrust for the static case were output and normalized to obtain dimensionless coefficients using:

$$C_{P0} = \frac{P_0}{\rho n^3 D^5} \tag{21}$$

$$C_{T0} = \frac{T_0}{\rho n^2 D^4} \tag{22}$$

where P_0 and T_0 are the static power and thrust. The coefficients were then extrapolated using data from a similar diameter propeller in [16] as experimenting with non-stationary cases was not feasible.

The total force output by the experiment in [13] includes the components of thrust. Hence, to obtain the aerodynamic lift and drag of the wing only, we use:

$$L = L_T - T sin\alpha \tag{23}$$

$$D = D_T + T cos\alpha \tag{24}$$

where L_T and D_T are the total forces as seen in [13]. Hereafter, all plots are of aerodynamic lift and drag, excluding thrust components.

TABLE I: DEP configuration simulation cases [13]

Case	V_∞	Re	RPM	J	C_T	C_P
1	$13.8m/s$	$226,000$	9000	0.657	0.10	0.14
2	$13.8m/s$	$226,000$	12000	0.490	0.14	0.15
3	$9.0m/s$	$151,000$	9000	0.439	0.17	0.16
4	$9.0m/s$	$151,000$	12000	0.329	0.21	0.17

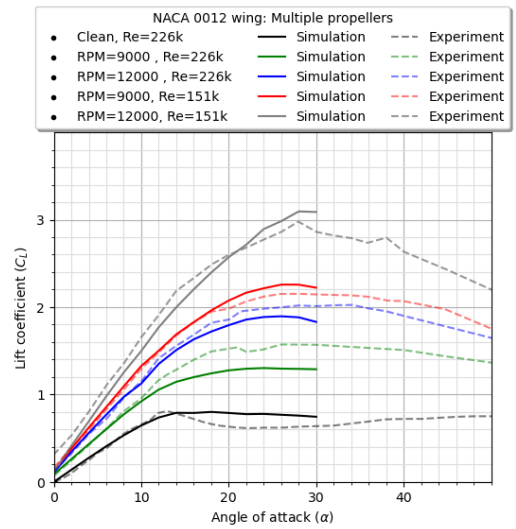

(a) C_L as a function of α

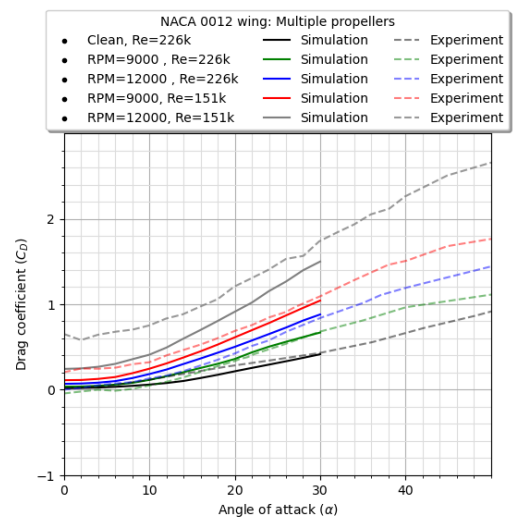

(b) C_D as a function of α

Fig. 8: Comparison of aerodynamic coefficients between CFD and experimental results [13] for varying rotational speeds and Reynold's number

B. Results

Five simulations were conducted with different values of the propeller rotational speed and freestream velocity. A clean wing case without propellers was also performed at $V_\infty = 13.8m/s$ as a control case for comparison. The four cases

Authorized licensed use limited to: Indian Institute of Technology. Downloaded on March 02,2026 at 13:35:13 UTC from IEEE Xplore. Restrictions apply.

apart from the clean wing were conducted at two rotational speeds of 9000 RPM and 12000 RPM with a chord Reynolds number of $Re = 151,000$ ($V_\infty = 9m/s$) and $Re = 226,000$ ($V_\infty = 13.8m/s$) as seen in table I. The CFD simulations were performed for angles of attack ranging from $\alpha = 0°$ to $\alpha = 30°$. Compared to the experiment, which ran till $\alpha = 90°$, the simulation had to be stopped short because it could not accurately simulate flow separation.

Fig. 8a and 8b show the lift and drag coefficient for all of the five cases along with experimental results from [13]. For the experimental data, the author mentions that "the maximum uncertainties for C_L and C_D were ± 0.025 and ± 0.005, respectively" [13]. We see an apparent increase in lift curve slope before stall is reached as the propeller thrust coefficient increases with decreasing advance ratio. Before stalling, the error is least in the base wing case and increases slightly as the propeller effect on the wing rises. The magnitudes and trends match the experimental results (dotted) for most angles. The stall angle, where the lift drops or plateaus in all cases, is the same as in the experiment. The lift at $\alpha = 0°$ has some error, which may be due to the ineffectiveness of the model in simulating the flow near the wing tip.

The drag coefficient follows the experimental results well for the first three cases in table I and the clean case. The drag increases non-linearly with the angle of attack, as expected. The minimum drag occurs at $\alpha = 0°$ because the airfoil is symmetric. Since the effect of the propeller is highest in the fourth case due to the high thrust coefficient, the error is most apparent in this case.

VI. Conclusion

In conclusion, the propeller model developed provides a good approximation of the lift and drag produced for various propeller-wing configurations with any number of propellers. Before reaching stall, the lift and drag curves align well with experimental results. The slope of the lift curve increases with an increase in the propeller thrust coefficient or a decrease in the advance ratio. The increase in drag coefficient between two cases with different thrust coefficients is non-linear as the angle of attack rises. Once stall is reached, the plots begin to diverge from the experimental data, albeit with minimal error. The stall angle, where the lift coefficient drops or levels off, closely resembles the experimental data. The error in some plots, as discussed, may relate to the turbulence modelling, mesh refinement or the reproduction of the experimental setup in CFD. However, the theoretical formulation of the model was successfully validated for propeller-wing configurations and is suitable for use in other numerical models, as intended.

References

[1] B.W. McCormick. *Aerodynamics, aeronautics and flight mechanics*. Wiley, 1979. ISBN: 9780471030324.

[2] S. Goldstein. "On the vortex theory of screw propellers". In: *Proceedings of the Royal Society of London. Series A, Vol. 123, No. 792* (1929), pp. 440–465.

[3] G.R. Hough and D.E. Ordway. "The generalized actuator disk". In: *Developments in theoretical and applied mechanics Vol. 2* (1964), pp. 317–336.

[4] B. Herfray and M. Nahon. "Development of a CFD model of propeller slipstream". In: *2024 International Conference on Unmanned Aircraft Systems (ICUAS)*. 2024, pp. 1309–1318.

[5] W. Khan. "Dynamics modeling of agile fixed-wing unmanned aerial vehicles". PhD thesis. McGill U., 2016.

[6] R.W. Deters. "Performance and slipstream characteristics of small-scale propellers at low Reynolds numbers". PhD thesis. University of Illinois Urbana Champaign, 2014.

[7] O. Russo et al. "Computational fluid dynamics analyses of a wing with distributed electric propulsion". In: *Aerospace, Vol. 10, No. 1* (2023), p. 64.

[8] H. Wang, W. Gan, and D. Li. "An investigation of the aerodynamic performance for propeller-aided lift-enhancing double wing configuration". In: *Aerospace Science and Technology, Vol. 105* (2020), p. 105991.

[9] X. Meng et al. "Performance analysis and flow mechanism of channel wing considering propeller slipstream". In: *Chinese Journal of Aeronautics, Vol. 36, No. 11* (2023), pp. 165–184.

[10] G.K. Ananda, R.W. Deters, and M.S. Selig. "Propeller induced flow effects on wings at low Reynolds numbers". In: *AIAA Applied Aerodynamics Conference, Vol. 31* (2013), p. 3193.

[11] F.M. Catalano. "On the effects of an installed propeller slipstream on wing aerodynamic characteristics". In: *Acta Polytechnica, Vol. 44, No. 3* (2004), pp. 8–14.

[12] L. Veldhuis. "Propeller wing aerodynamic interference". PhD thesis. Delft University of Technology, 2005.

[13] T. Lee, T. Ni, and G. Lin. "Aerodynamics and flowfield of distributed electric propulsion tiltwing during transition with deflected trailing-edge flap". In: *ASME Journal of Fluids Engineering, Vol. 146, No. 5* (2024), p. 051202.

[14] E. Svenning. *Implementation of an actuator disk in OpenFoam*. Tech. rep. Chalmers University of Technology, 2010.

[15] Q.R. Wald. "The aerodynamics of propellers". In: *Progress in Aerospace Sciences, Vol. 42* (2006), pp. 85–128.

[16] J.B. Brandt et. al. *UIUC propeller database, Vols 1-4, University of Illinois at Urbana-Champaign, Department of aerospace engineering*. URL: https://m-selig.ae.illinois.edu/props/propDB.html.

[17] R.W. Deters, G.K. Ananda, and M.S. Selig. "Slipstream measurements of small-scale propellers at low Reynolds numbers". In: *AIAA Applied Aerodynamics Conference, Vol. 33* (2015), p. 2265.

[18] T. Sinnige et. al. "Unsteady pylon loading caused by propeller-slipstream impingement for tip-mounted propellers". In: *AIAA Aerospace Sciences Meeting, Vol. 55, No. 4* (2017), pp. 1605–1618.

Authorized licensed use limited to: Indian Institute of Technology. Downloaded on March 02,2026 at 13:35:13 UTC from IEEE Xplore. Restrictions apply.